BIG SOSPENSIONE 550

COD: 5485-LBN

Use:
inside, led

Installation:
Suspended

Fixing system:
Adjustable micrometric suspension system with steel cable L = 2100 mm

Body/structure:
Aluminium body

Coating:
Epoxy powder coating for inside use

Colour:
White

Glass/diffuser:
Polycarbonate bi-satined diffuser

Cable gland:
Nylon 66 cable locks

Control gear:
Integrated LED diodes ballast, stabilized output current 700mA dc

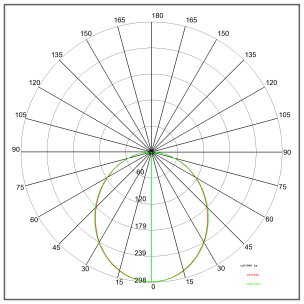

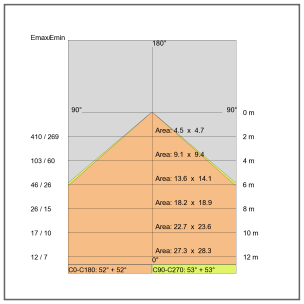

Voltage:	220-240V 50/60Hz
Beam angle :	Simmetric flood beam
Insulation class:	Insulation class 1
Weight:	5,300 kg
IP rating:	40
Glow wire:	[650 °C]
Lamp included:	Yes
Kind of led:	Power LED
Luminaire wattage:	46 W
Luminous flux:	4603.5 lm
Lamp/led rated life:	50000 hours h
Colour temperature:	4000
CRI:	80
Color constancy:	3 SDCM

Lamp: 1 x LED 42 W 5740 lm

650°C

IP 40 A+ RG0

Review board:	01-09-2015

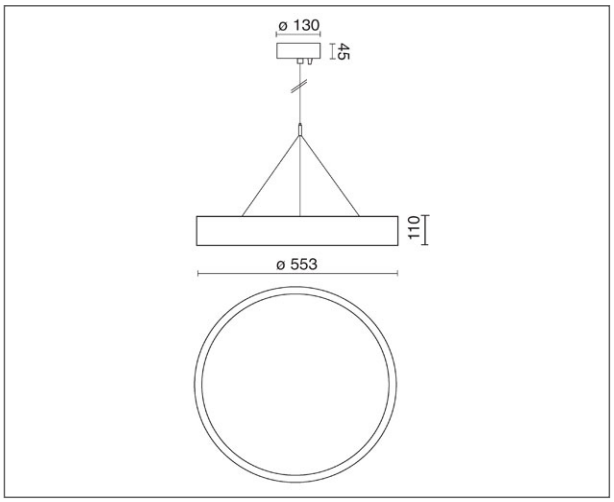

Complete Lighting Services Ltd
Tel: 01256 811600 Fax: 01256 811601
email: sales@completelighting.co.uk
web: www.completelighting.co.uk

BIG SOSPENSIONE 550

COD: 5485-LBN

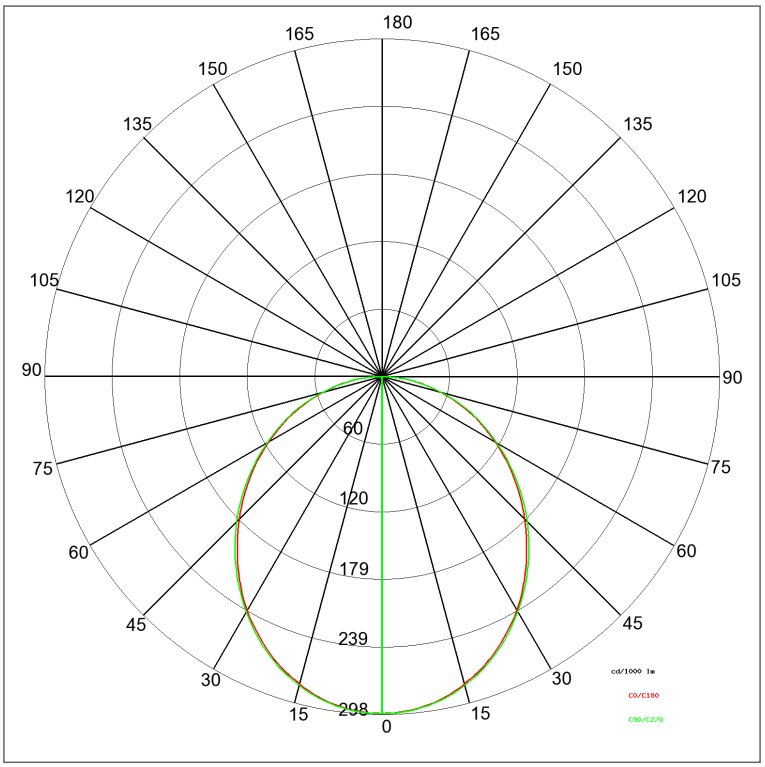

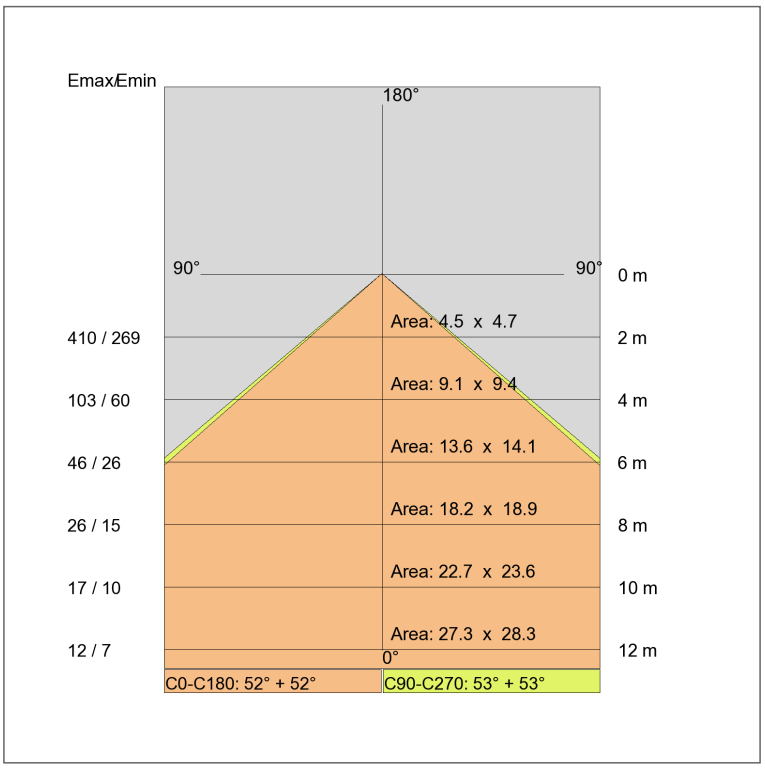

Complete Lighting Services Ltd
Tel: 01256 811600 Fax: 01256 811601
email: sales@completelighting.co.uk
web: www.completelighting.co.uk